T400/T400FM: Miniature Chrome-Plated Brass Ball Valve





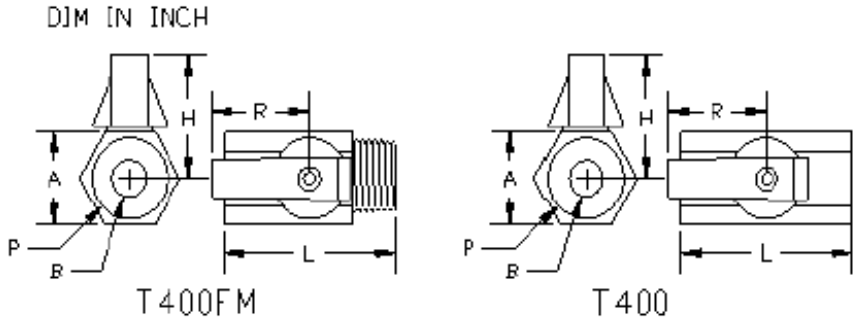

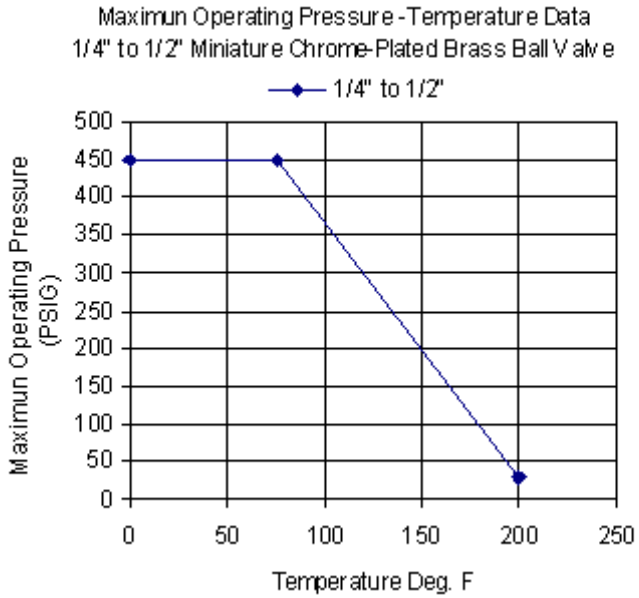

Valve Specifications		
Valve Type	T400	T400FM
Operating Pressure	0-450 PSI @ 75 ºF	
Operating Temperature	0 TO 200 Deg. F	
Ball	Chrome Plated Brass	
Body Materials	Chrome or Nickel Plated Brass	
Seal Materials	PTFE	
Handel	Metal or Plastic	
Service	Air, Liquid	

	A	B (BORE)	H	L	P (NPT)	R
T400 1/4	0.80	0.31	1.00	1.58	1/4	0.93
T400 3/8	0.80	0.31	1.00	1.58	3/8	0.93
T400 1/2	0.96	0.39	1.10	1.78	1/2	0.93
T400FM 1/4	0.80	0.31	1.00	1.58	1/4	0.93
T400FM 3/8	0.80	0.31	1.00	1.58	3/8	0.93
T400FM 1/2	0.96	0.39	1.10	1.78	1/2	0.93